Gcontrol
Assembly Instructions

Install Plastic Mounting Base

AltMill Mounting

4x M5-10mm Socket Head Cap Screws

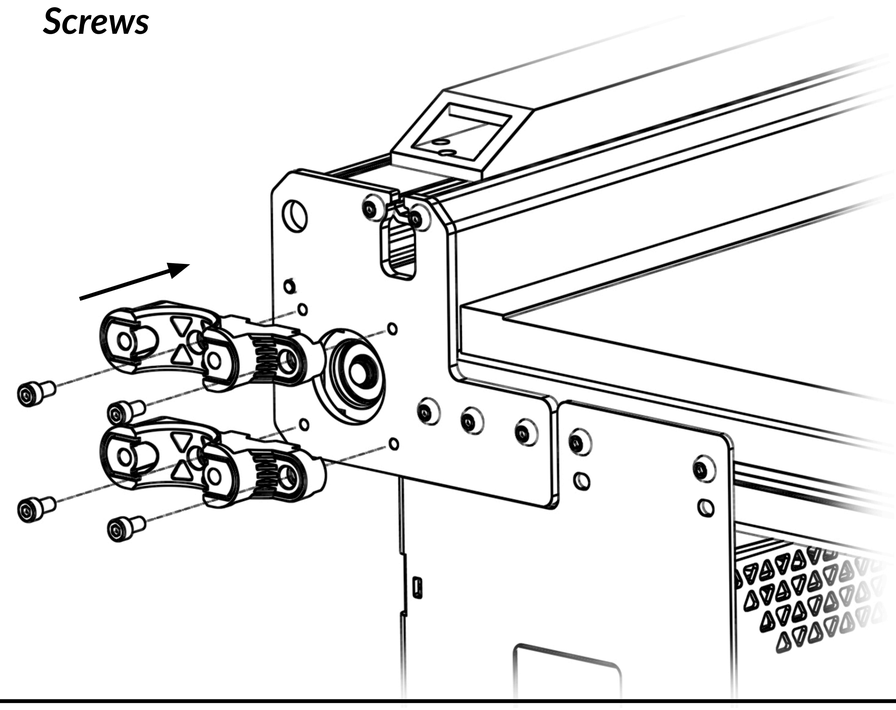

OR

LongMill MK3 Mounting

4x M5-30mm Socket Head Cap Screws
4x Plastic Spacers

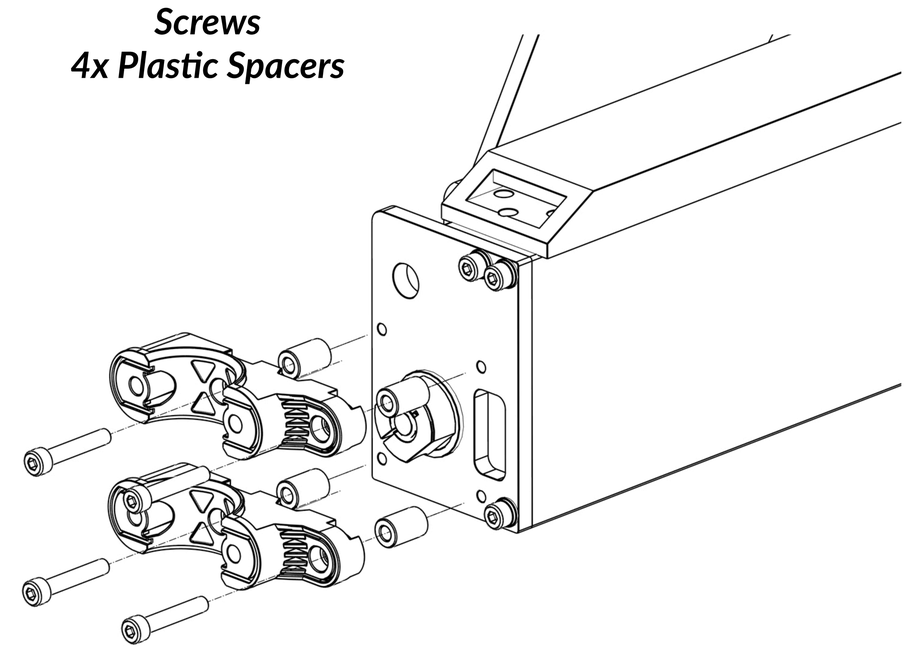

2. Install Post & Mounting Caps

4x M5-50mm Socket Head Cap Screws

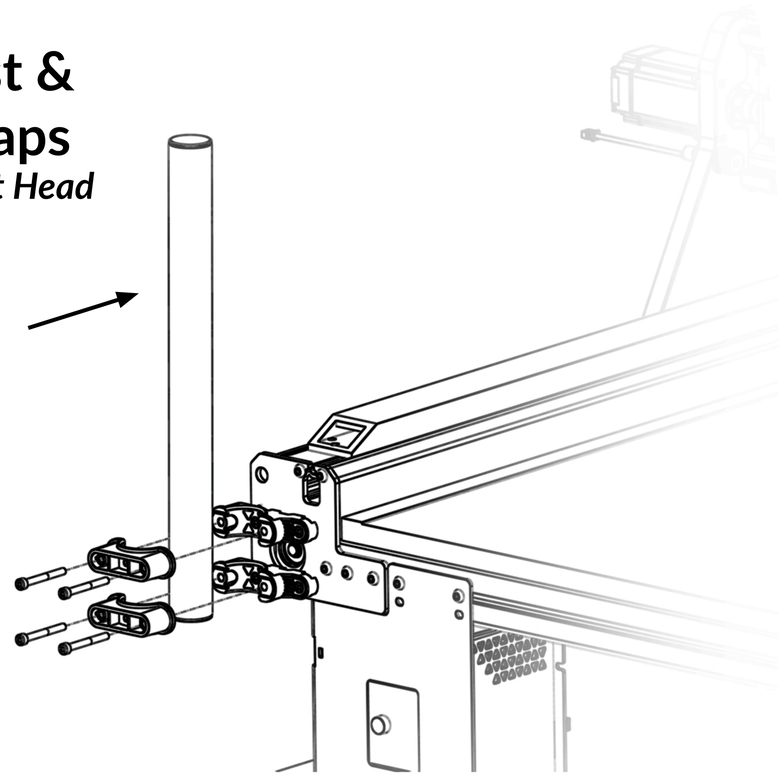

3. Install Arm Link

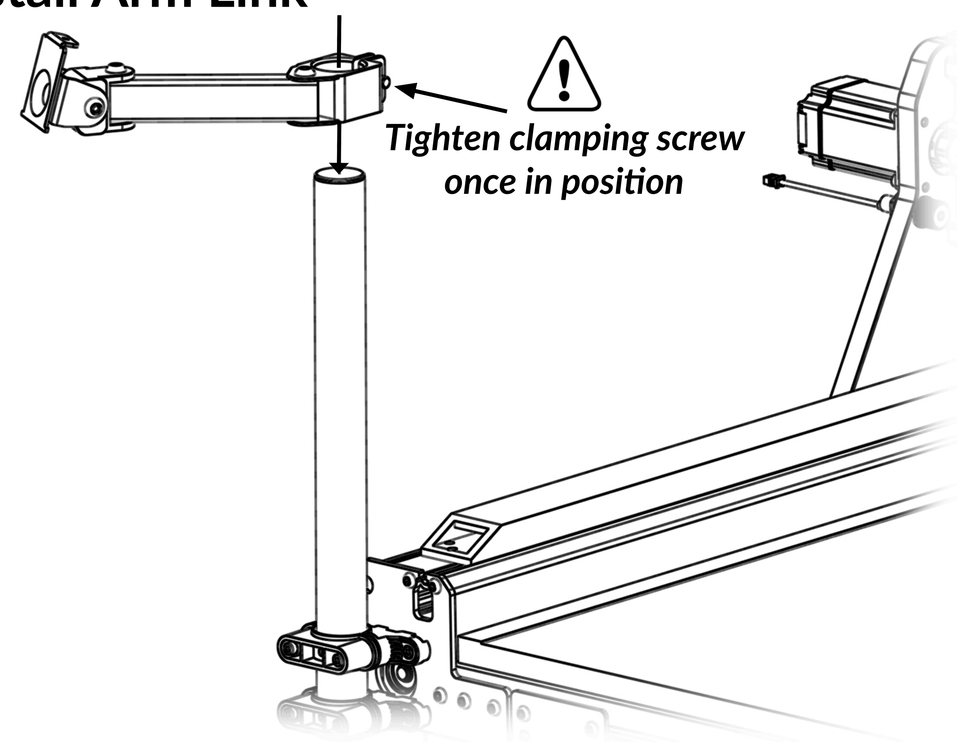

4. Install Mounting Plate

4x M4-8mm Button Head Screws

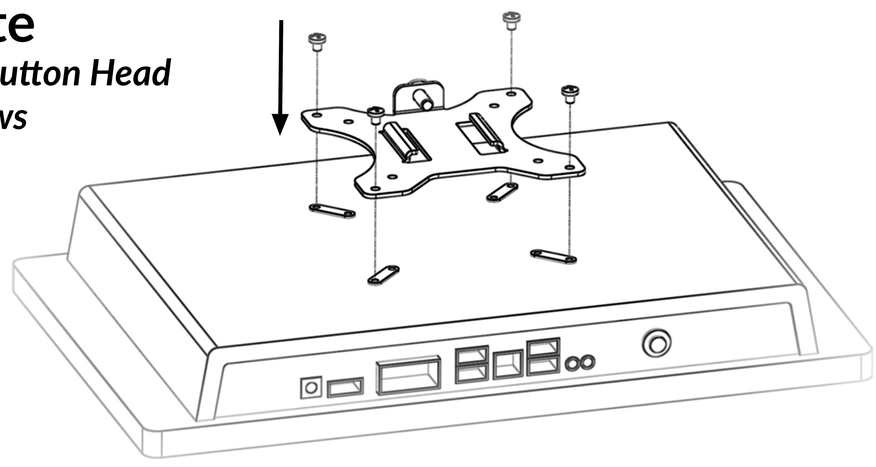

5. Mount Panel to Arm

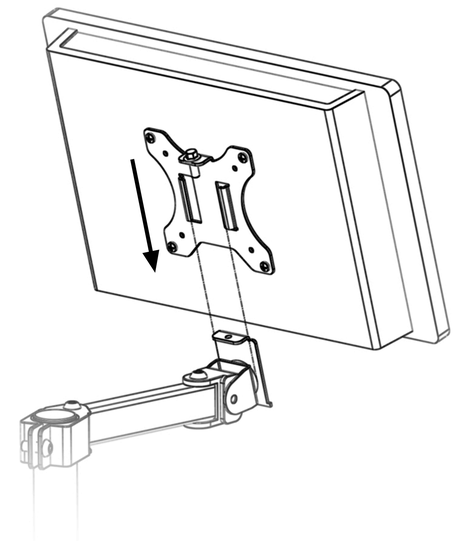

6. Fasten Locking Screw to Arm Mount

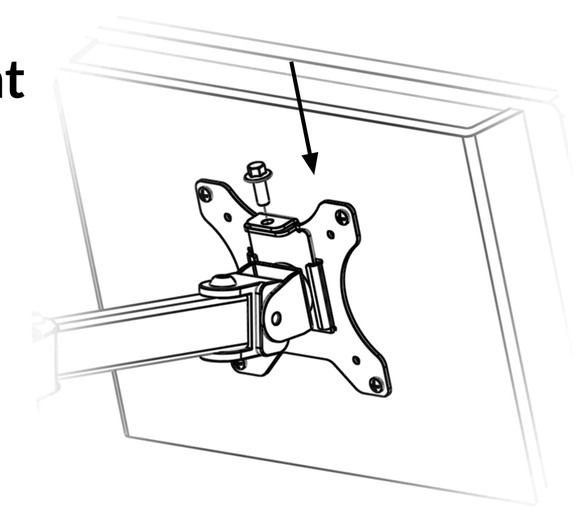
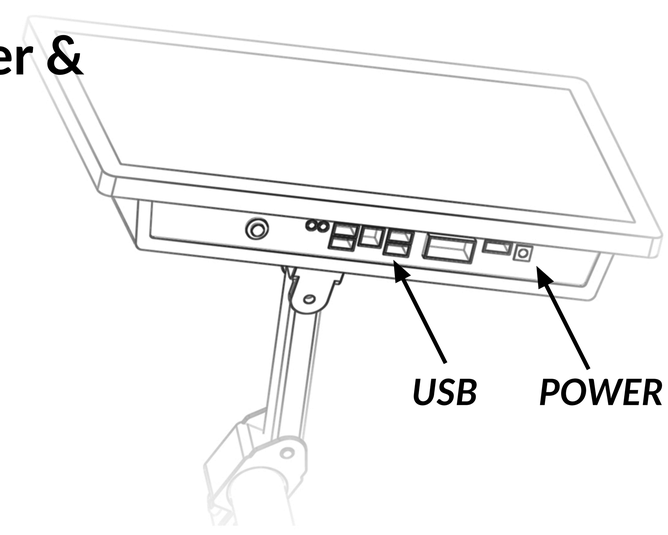
7. Plug In Power & USB Cable