Enclosed VFD Unit Installation Instructions

For table leg mounting on all AltMIll 2x4 & 4x4 Machines

ALTMILL

Step 1

Use the plastic VFD mounting spacer to mount E-stop module using two M5-30mm screws and two M5 nuts (included)

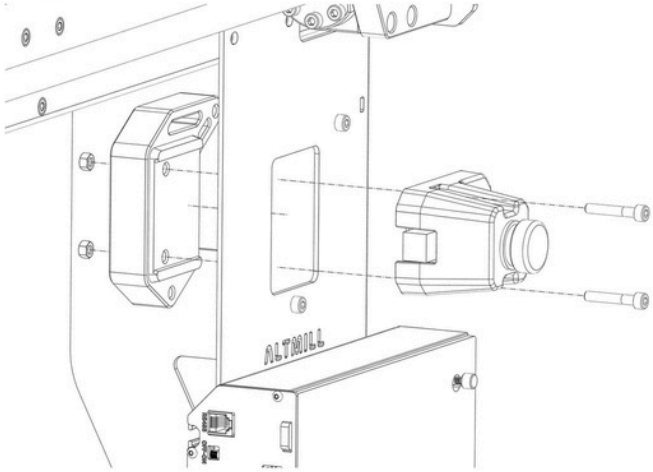

Step 2

Mount the VFD unit inside the table leg using the remaining two M5-30mm screws

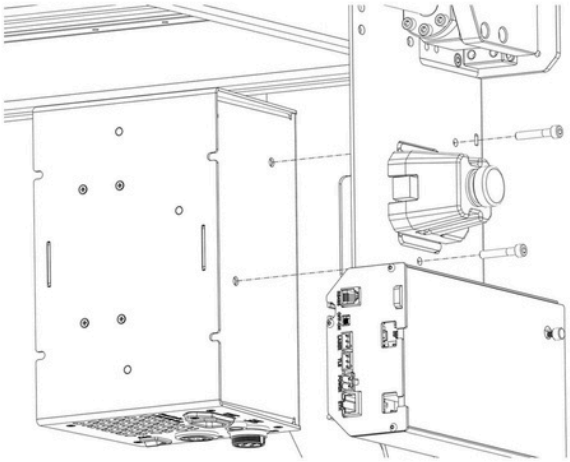

Step 3

The VFD unit should be positioned with the screen/panel aligned with the cutout in the table leg. Plug the E-stop cable back in.

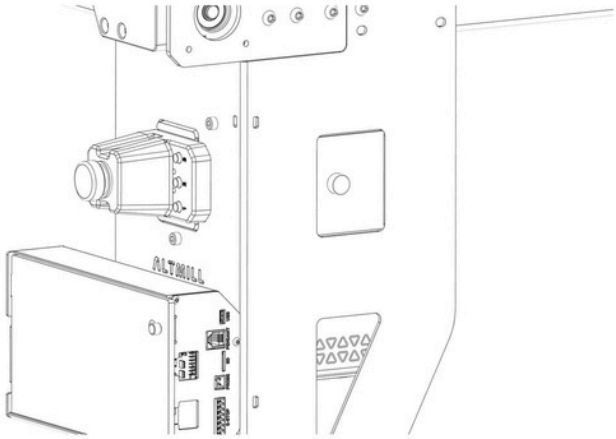

Step 4

Plug in the included control cable and spindle cable to the bottom of the VFD unit. Plug in the wall power cord.

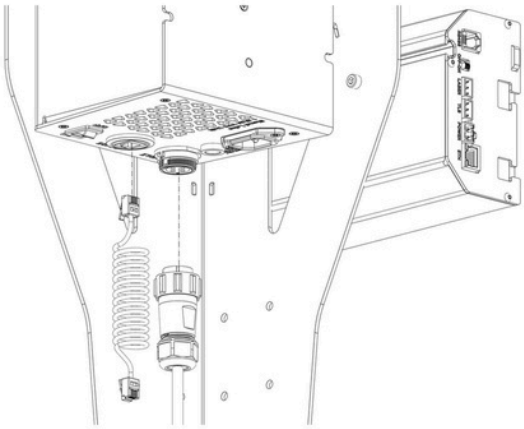

Step 5

Plug in the VFD control cable into the 'RS485' connector on the SLB-EXT controller.

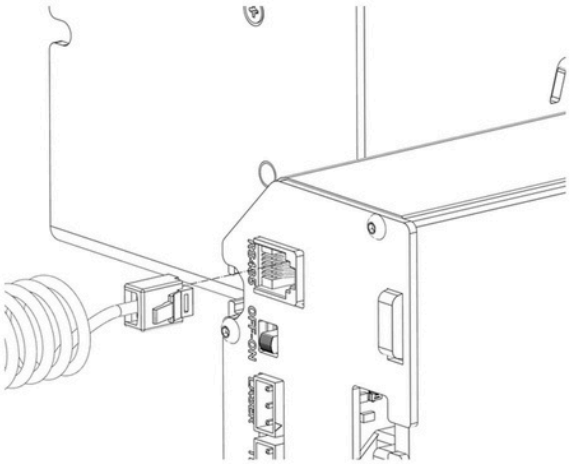

Step 6

Route the spindle cable through the drag chain of the machine, then connect this to the top of the spindle.

Follow the remaining setup instructions on our resources page by scanning below.

https://resources.sienci.com/view/am-mk2-spindle-kit-setup/